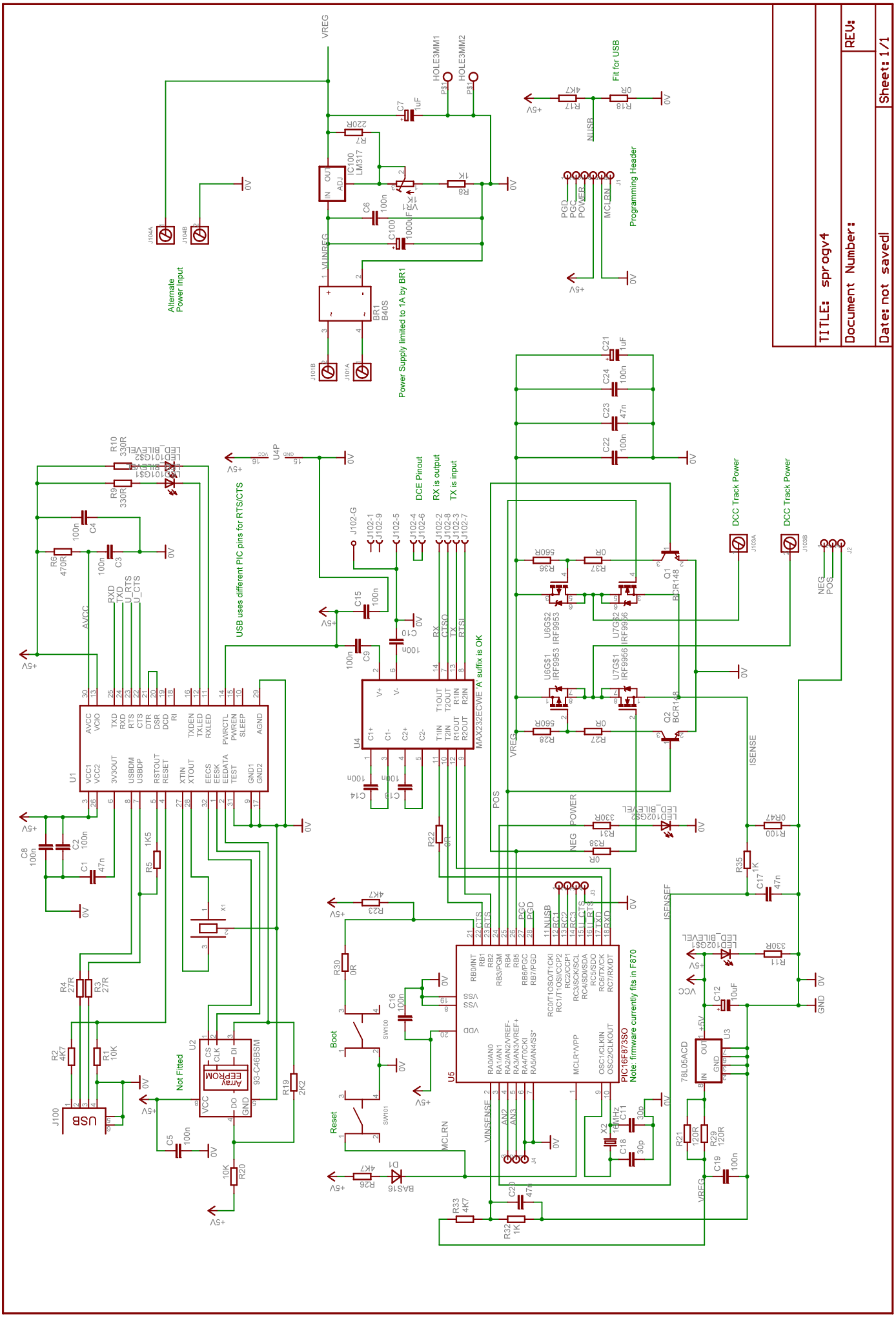

31/10/2004 17:05:47 f=0.69 D:\Data\projects\sprogv4\Eagle\sprogv4.sch (Sheet: 1/1)